GF501
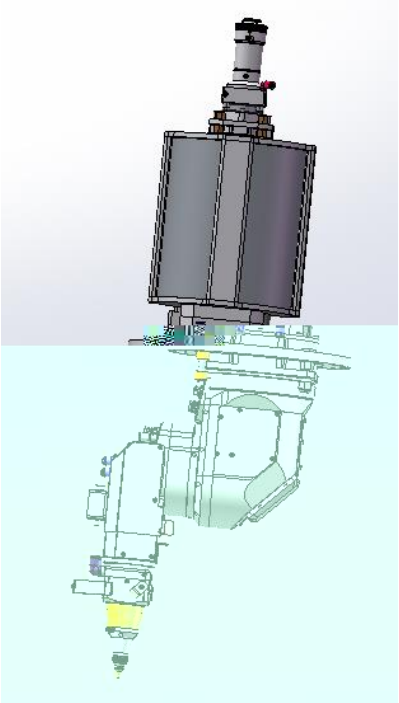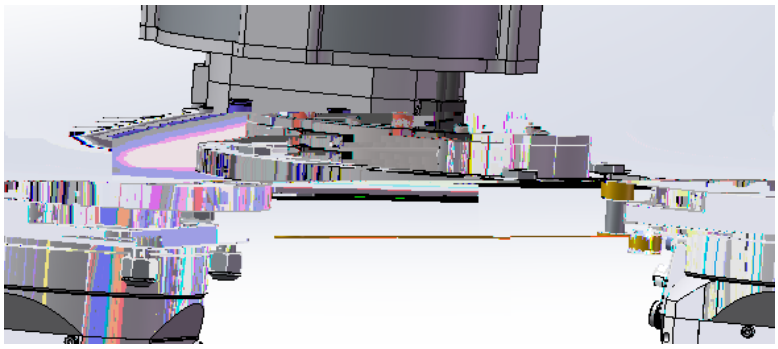
1		A	±135°	
		C	±540°	
		H	±15 mm	
2		OA		
3				
4			4000W	
5			35mm	
6		A C	1.5 rev/s	
7		A C	0.00006°